RoHS Compliant

ZONE	ECN.NO.	DESCRIPTION	DRAWING	DATE
A		INITIAL	林生財	2020.02.18

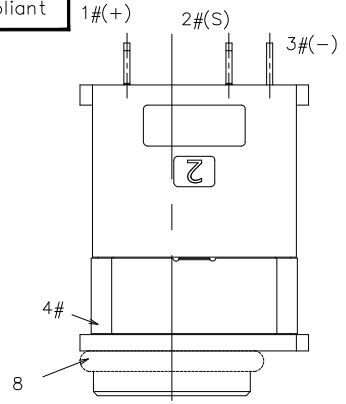

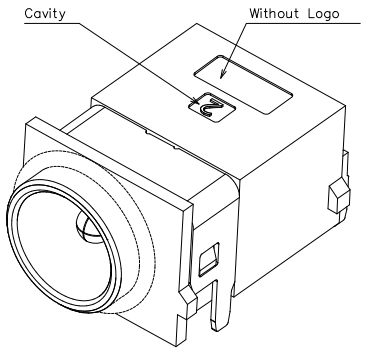

3D VIEW

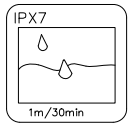

NOTES
1.Current Rating: 24V & 5A Max.
2.Contact Resistance: 50m Ohms Max.(intial)
3.Insulation Resistance: 100M Ohms Min./500V DC
4.Dielectric Withstanding Voltage: 500V AC/1Minute
5.Mating Force: 35N Max, Withdrawal Force: 3N Min.
6.Durability: 5,000 Cycles
7.Operating Temperature: −25°C to+85°C
8.WATER PROOFNESS: THIS PRODUCT IS BASED ON IPX7.

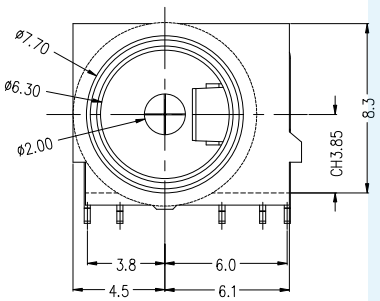

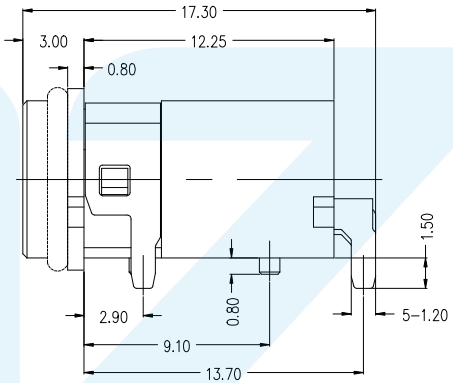

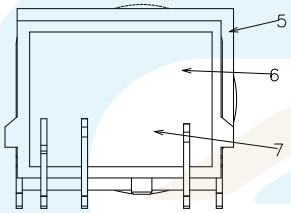

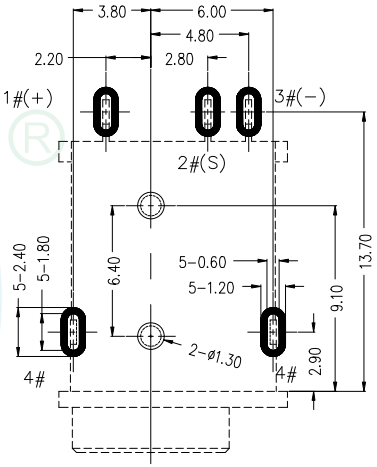

PCB LAYOUT (TOP VIEW)
TOLERANCE: ±0.05

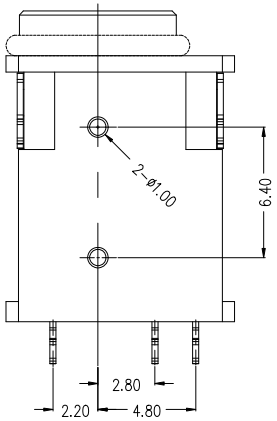

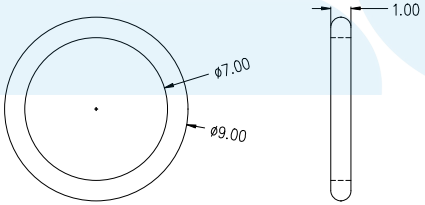

WHITE WATERPROOF RING

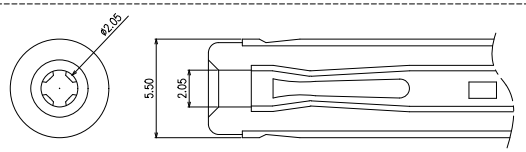

Circuit Diagram

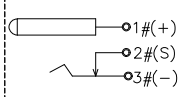

Not to install the waterproof ring shipment

NO.	DESCRIPTION	MATERIAL	REMARKS	QTY
8	WATERPROOF RING	SILICONE	WHITE	1
7	GLUE	EPOXY	COLOR BLACK	1
6	BACK COVER	HIGH TEMPERATURE	COLOR BLACK	1
5	HOUSING	HIGH TEMPERATURE	COLOR BLACK	1
4	TERMINAL 4#	STAINLESS STEEL	NICKEL PLATING OVERALL	1
3	TERMINAL 3#	COPPER ALLOY	NICKEL UNDERPLATING OVERALL, Au PLATING ON THE SOLDER AREA	1
2	TERMINAL 2#	COPPER ALLOY	NICKEL UNDERPLATING OVERALL, Au PLATING ON THE WHOLE	1
1	CENTER PIN	COPPER ALLOY	NICKEL UNDERPLATING OVERALL, Au PLATING ON THE SOLDER AREA	1

LZG INDUSTRIAL CO. LTD

DRAWING:	林生財	DATE:	2020.02.18	SCALE	1:1
CHECK:	李宏鑫	DATE:	2020.02.18	MATERIAL	*
APPROVAL:	楊建宜	DATE:	2020.02.18	DWG. NO.	
DRAWING NO.	ZB30007−05DBAP−A			SHEET	1/1

PART NAME	ø2.0 DC WATERPROOF POWER JACK	TOLERANCE UNLESS OTHERWISE SPECIFIED:	0.0±0.30 0.00±0.20 0.000±0.10	0.°±2° 0.0°±1° 0.00°±0.5°	UNIT: mm
PART NO.	ZB30007−05DBAP−A				