RoHS Compliant

ZONE	ECN.NO.	DESCRIPTION	DRAWING	DATE
A		INITIAL	林生財	2020.02.18

NOTES:

SPECIFICATION:

1. CURRENT RATING: 5.0A MAX
2. VOLTAGE: 100 VAC
3. TEMPERATURE RANGE: −30 °C ~ 85 °C
4. CONTACT RESISTANCE: 40 MILLIONHM MAX
5. INSULATION RESISTANCE: 100 MEGOHMS MIN.
6. LNSERTION FORCE : 5N~20N
7. UNMATING FORCE: 8N~20N
8. DURABILITY: 10,000 CYCLES

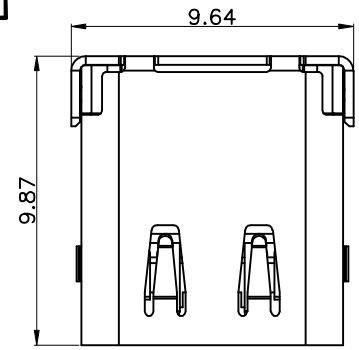

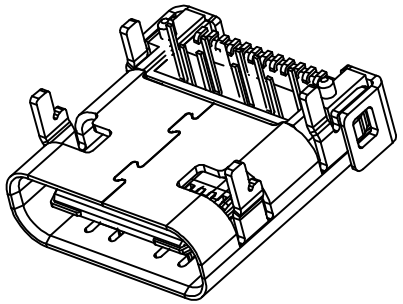

3D VIEW

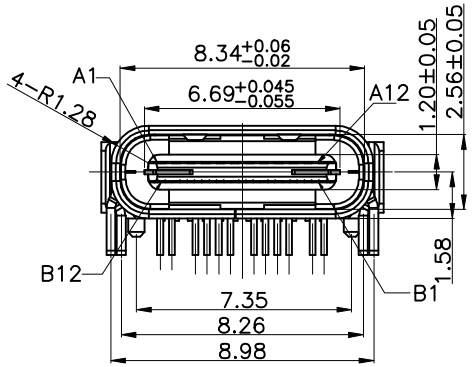

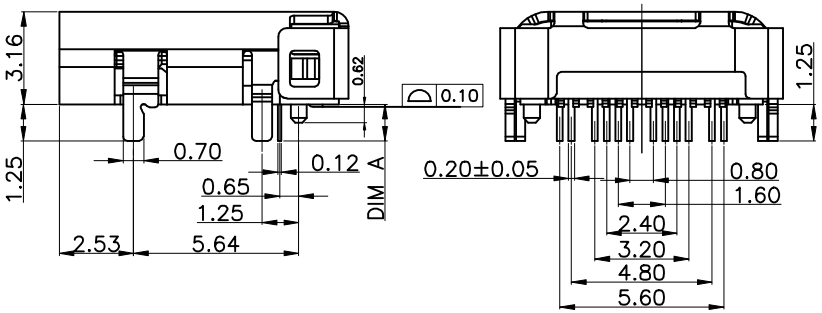

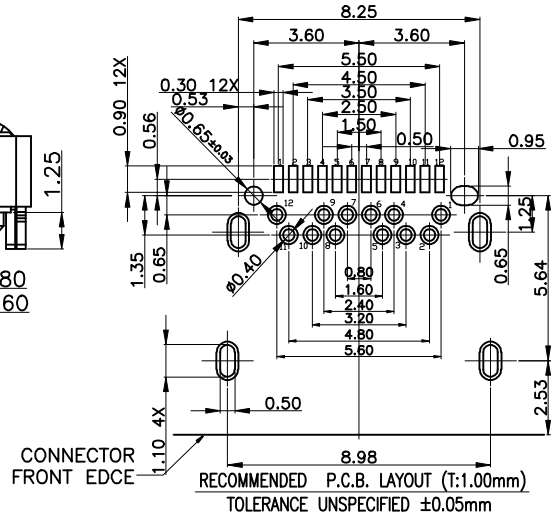

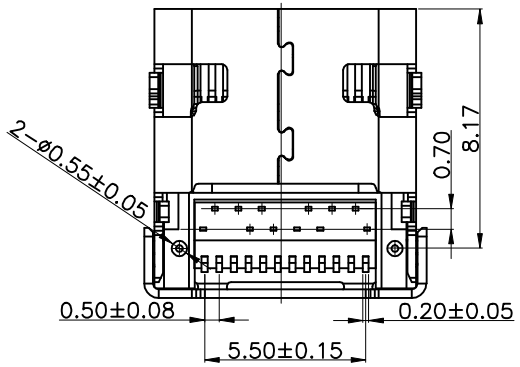

PIN	SIGNAL NAME	PIN	SIGNAL NAME
A1	GND	B12	GND
A2	SSTXP1	B11	SSRXP1
A3	SSTXN1	B10	SSRXN1
A4	VBUS	B9	VBUS
A5	CC1	B8	SBU2
A6	DP1	B7	DN2
A7	DN1	B6	DP2
A8	SBU1	B5	CC2
A9	VBUS	B4	VBUS
A10	SSRXN2	B3	SSTXN2
A11	SSRXP2	B2	SSTXP2
A12	GND	B1	GND

NO.	DESCRIPTION	MATERIAL	REMARKS	QTY
4	SHELL	STAINLESS STEEL	Nickel Plating Overall	1
3	SPRING	STAINLESS STEEL	---	1
2	CONTACT	COPPER ALLOY	Au on Contact area	24
1	HOUSING	HIGH TEMPERATURE PLASTIC	COLOR BLACK	1

LZG INDUSTRIAL CO. LTD

DRAWING:	林生財	DATE:	2020.02.18	SCALE	1:1
CHECK:	李宏鑫	DATE:	2020.02.18	MATERIAL	*
APPROVAL:	楊进宝	DATE:	2020.02.18	DWG. NO.	
DRAWING NO.	ZB48042−24DBAP−A			SHEET	1/1

PART NAME	USB TYPE C 24 PIN	TOLERANCE UNLESS OTHERWISE SPECIFIED:	0.0±0.20 0.00±0.15 0.000±0.05	0.°±2° 0.0°±1° 0.00°±0.5°	UNIT: mm
PART NO.	ZB48042−24DBAP−A				