RoHS Compliant

ZONE	E C N . N O .	DESCRIPTION	DRAWING	DATE
A		INITIAL	林生財	2020.02.18

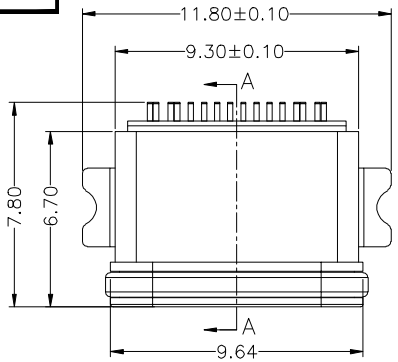

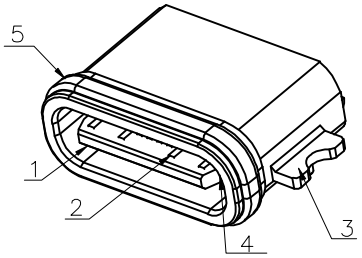

3D VIEW

SPECIFICATIONS:
1.ELECTRICAL:
1-1:CURUENT RATAING:
VBUS AND GND CONTACTS RATED AT 3A Max
VBUS AND GND CONTACTS RATED AT 0.5A Min
0.9Amps Max.for all other contact.
PARALLELED FOR A TOTAL OF 5A;
1-2:INITIAL CONTACT RESISTANCE:40 MEGOHMS MAX
1-3:DIEELECTRIC WITHSTANDING VOLTAGE:100V AC MIN;
2:MECHANICAL CHARACTERISTICS:
2-1:MATING FORCE:5~20N
2-2:UNMATING FORCE:8~20N(INITIAL),6~20N(AFTER 10000 CYCLES)
2-3:FREQUENCE:200±50 CYCLES/HOUR,10000 CYCLES
2-4:OPERATING TEMPERATURE;-40°~80°.
2-5:IR REFLOW:THE PEAK TEMPERATURE ON THE BOARD SHALL BF MAINTAINED FOR 10 SECONDS AT 260°C.
2-6:WATERPROOF:IP-X7.

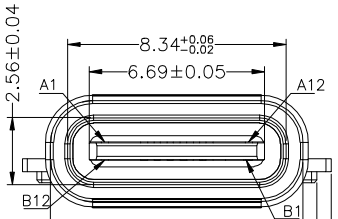

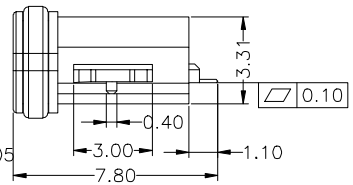

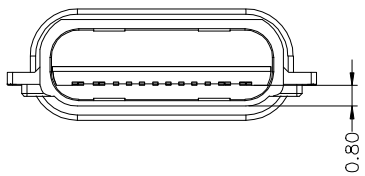

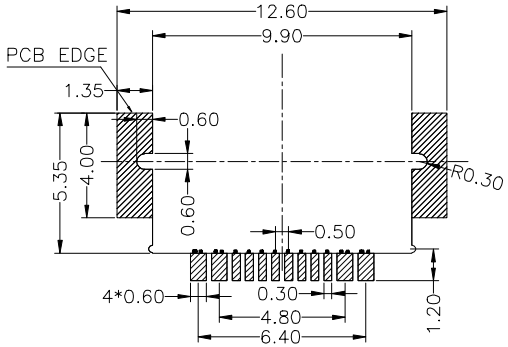

RECOMMENDED P.C.B. LAYOUT (PCB T=0.8mm)
TOLERANCE UNSPECIFIED ±0.05mm

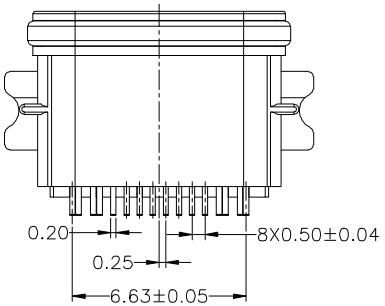

TABLE B
Type c Pin Assignments

PIN	SIGNAL NAME	PIN	SIGNAL NAME
A1	GND	B12	GND
A4	VBUS	B9	VBUS
A5	CC1	B8	SBU2
A6	DP1	B7	DN2
A7	DN1	B6	DP2
A8	SBU1	B5	CC2
A9	VBUS	B4	VBUS
A12	GND	B1	GND

NO.	DESCRIPTION	MATERIAL	REMARKS	QTY
5	RUNNING RING	SILICA GEL	COLOR BLUE or WHITE	1
4	MIDDLE PLATE	STAINLESS STEEL	———	1
3	SHELL	ZINC ALLOY	NICKEL PLATING OVERALL	1
2	CONTACT	COPPER ALLOY	GOLD PLATING OVERALL	16
1	HOUSING	HIGH TEMPERATURE PLASTIC	COLOR BLACK	1

LZG INDUSTRIAL CO. LTD

DRAWING:	林生財	DATE:	2020.02.18	SCALE	1:1
CHECK:	李宏鑫	DATE:	2020.02.18	MATERIAL	*
APPROVAL:	楊进宝	DATE:	2020.02.18	DWG. NO.	
DRAWING NO.	ZB48016-16SBAP-A			SHEET	1/2

PART NAME	WATERPROFF TYPE C 16PIN	TOLERANCE UNLESS OTHERWISE SPECIFIED:	0.0±0.3 / 0.00±0.2 / 0.000±0.1	0.°±2° / 0.0°±1° / 0.00°±0.5°	UNIT: mm
PART NO.	ZB48016-16SBAP-A				

RoHS Compliant

ZONE	ECN.NO.	DESCRIPTION	DRAWING	DATE
A		INITIAL	林生財	2020.02.18

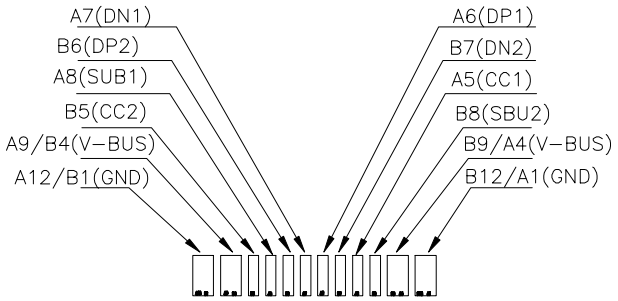

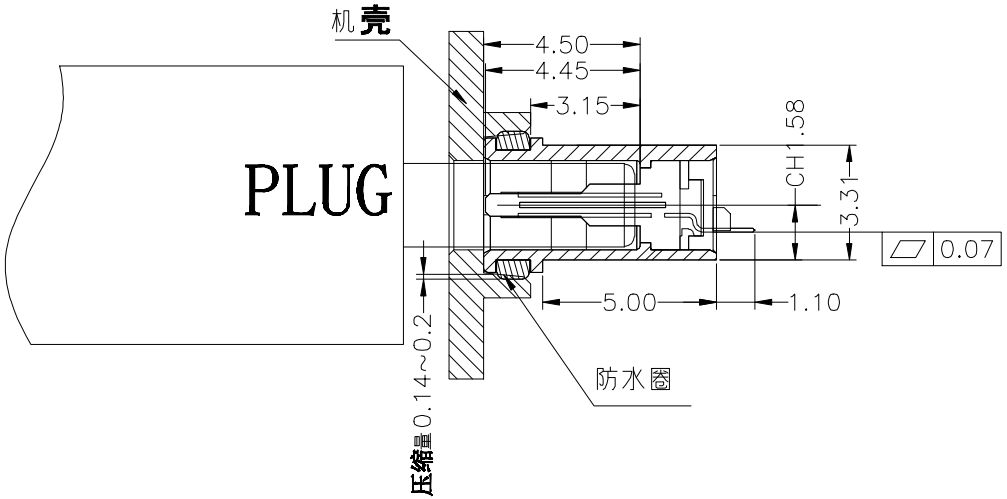

产品防水机构示意图

LZG INDUSTRIAL CO. LTD					DRAWING:	林生財	DATE:	2020.02.18	SCALE 1:1
					CHECK:	李宏鑫	DATE:	2020.02.18	MATERIAL *
PART NAME	WATERPROFF TYPE C 16PIN	TOLERANCE UNLESS OTHERWISE SPECIFIED:	0.0±0.3 0.00±0.2 0.000±0.1	0.°±2° 0.0°±1° 0.00°±0.5°	UNIT: mm	APPROVAL:	楊進宝	DATE:	2020.02.18	DWG. NO.
PART NO.	ZB48016-16SBAP-A					DRAWING NO.	ZB48016-16SBAP-A		SHEET 2/2